ECE 204L - STATE MACHINES - LAB 23
ANALYSIS OF A STATE MACHINE

WINTER 2004 **A.P. FELZER**

OBJECTIVE

The objective of this lab is to build and test a state machine.

LAB

1. Given the following state machine

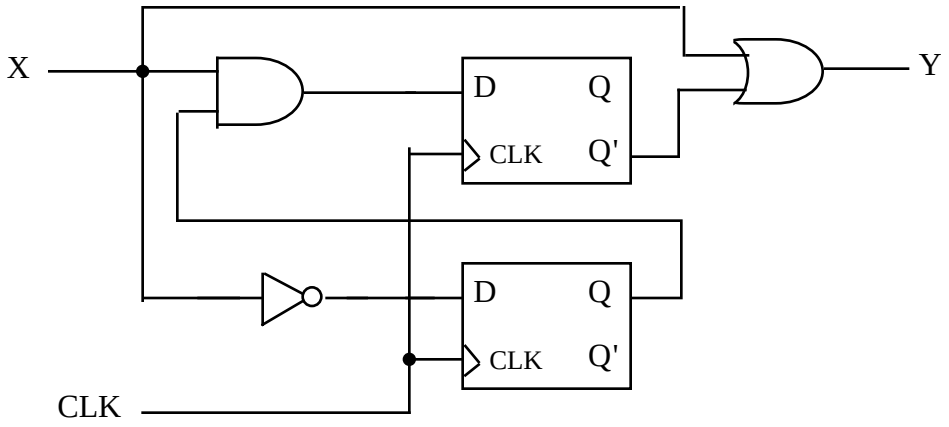

a. Calculate the state diagram of this logic circuit
b. Draw the logic diagram with pin numbers
c. Take measurements to obtain the next state table. Make use of CLEAR and PRESET to get the state machine into desired states
d. Make use of your measured next state table to draw a state diagram of the state machine
e. Verify that your measured and calculated next state diagrams agree
f. Make use of your measured results to draw a representative timing diagram